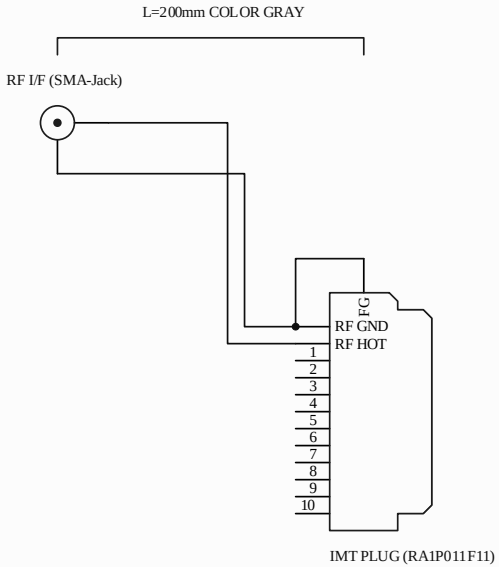

Title	IMT-SMA		
Size A4	Number	Revision	
Date 2005/08/29 11:41:36		Sheet of	
File IMT-SMA.SCHDOC			

3way Technology
5-17-16, koremasa, Fuchu-shi, Tokyo 183-0014
TEL +81 42 365 9229 FAX +81 42 365 9231